KOROSEAL Wall Protection Systems
Korowood™ BW20, BW40, BW60, BW70, & BW90 Chair Rail

Recommended Installer Qualifications: Only those parties experienced in working with finished fine wood products should engage in installing **Korowood™** Chair Rail.

Recommended Installation Equipment: Radial Arm Saw or Power Miter Box with 12" (304.8mm) sharp carbide-tipped Alternating Tooth, Bevel-Positive Hook, 80-100 teeth blade. Tape Measure, Level, Chalk Line, Utility Knife, Drill, Drill Bits, Screwdriver, Sanding Block, Wood Glue, Removable Marker, Cleaning Cloth, and Suitable 1/4" (6.35mm) x 3" (76.2mm) Long Mounting Fasteners and Finishing Nails.

1. Locate and install **Korowood** Chair Rail in accordance with architectural drawings and specifications. When required, **Korogard®** shop drawings should be used in conjunction with these documents.
2. Lay out work to be completed, including all component parts, along base of substrate (wall). Check material for any damage that may have occurred during shipment and/or handling at job site.
3. Snap chalk line at proper location on substrate to ensure level installation. Chalk line should be calculated to locate bottom edge of Chair Rail.

   Note: Chalk line may be visible after installation and may require removal at cleanup.
4. Aluminum retainer insert is to be installed in cutout on face of rail using No. 8 x 1/2" (12.7mm) truss or pan head screws (supplied by **KOROSEAL**) at 24" (609.6mm) maximum spacing. At this point, retainer may be installed and cut with wood rail (see below) or it may be cut to appropriate length separately and then installed in rail. After cutting to finished dimension, drill and install additional screws 1" (25.4mm) to 3" (76.2mm) in from retainer ends as necessary to properly secure retainer ends to rail.

   Note: At Chair Rail splice conditions, cut retainer so that splice in retainer is offset 12" (304.8mm) from splice in wood rail, and drill and screw retainer to rail on both sides of splice in wood.
5. Determine cut length of rail by locating ends on substrate, measure distance, and allow 3/4" (19.05mm) at end cap, 0" (0mm) at substrate inside corners, and 0" (0mm) at substrate outside corners. Mark Chair Rail at back of wood and miter-cut rail in appropriate direction to appropriate length. Miter ends at outside corners and inside corners to 45˚ (see details). Use care to assure accurate and clean cuts. (Wrap finished rail with masking tape at location of cut and cut so that saw blade rotates into face of rail as it cuts.)

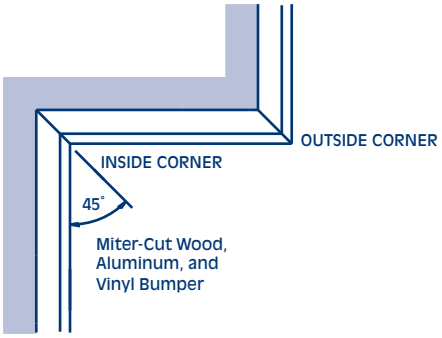

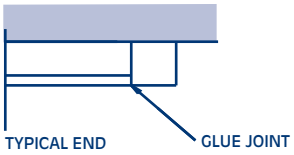

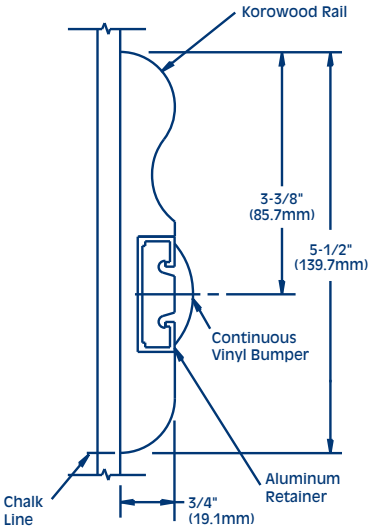

Model BW20

KOROSEAL Wall Protection Systems
Korowood™ BW20, BW40, BW60, BW70, & BW90 Chair Rail

6. Drill 9/32" (7.15mm) holes through Chair Rail along center line of aluminum retainer insert at 3" (76.2mm) to 6" (152.4mm) infrom each end of rail and intermediate locations not exceeding 32" (812.8mm) O.C. Then place wood railing in proper position on chalk line and mark hole locations on substrate. Drill holes in substrate using proper bit size for selected fasteners.

7. Trial-fit End Caps/Adjoining Piece to assure proper fit. If satisfactory, assure that surfaces to be glued are clean and unfinished (sand if required) and glue, using PVA wood glue or equal (supplied by installer), adjoining parts together, carefully aligning parts. Allow glue to set and wipe any excess from joint with water-moistened cloth. Use two finishing nails, one near the top and one near the bottom, through the cap into the rail end and finish with wood filler.

   Note: Prior to installation of protective Korogard® vinyl accent strip, make sure all fasteners are secured and properly seated.

8. Mount assembly to substrate using proper fasteners (supplied by installer). Tighten securely.

   Note: Due to the relatively thin cross-section of the Chair Rail, some degree of "cupping" may be evident. If so, use appropriate finishing nails (supplied by installer) at sufficient spacing, top and bottom, to overcome same.

9. Vinyl insert is to be mitered at corners in the same manner as wood rail. Determine cut length of vinyl insert by measuring face of rail. Mark the measurements on the vinyl, using a soft pencil or other removable marker, at point where back of vinyl contacts face of aluminum retainer. Cut ends of vinyl to 45˚ in the appropriate direction, using a scrap piece of aluminum retainer as holding fixture. Cut vinyl slightly longer than rail to assure tight joints.

10. Install **Korogard** vinyl insert starting at mid-point of rail face. Locate mid-points of rail and vinyl, match up and seat vinyl there, and proceed out to each end. Repeat as necessary. Vinyl may be seated by holding at angle, placing one leg inside retainer, pinching between fingers, and applying pressure to seat insert into place.

11. Clean **Korowood™** Chair Rail using water-moistened cloth. Use **Korowood** Touch-Up Kit provided to repair stained wood where minor damages or blemishes may have occurred during installation. Touch-Up Kits are not provided for "clear varnish" finished Chair Rails. Use Minwax® brand "Satin Sheen Polyurethane" or equal to overcoat repairs to all finishes.

12. If there are any questions, please call your local **Korogard** representative.

KOROGARD®
WALL PROTECTION SYSTEMS

800-628-0449 • www.korogard.com • Division 10 26 00

Korogard® and Korowood™ are registered trademarks and trademarks of RJF International Corporation.
Minwax® is a registered trademark of The Sherwin-Williams Company.

KOROSEAL Wall Protection Systems
Korowood™ BW20, BW40, BW60, BW70, & BW90 Chair Rail

Model BW20 is shown

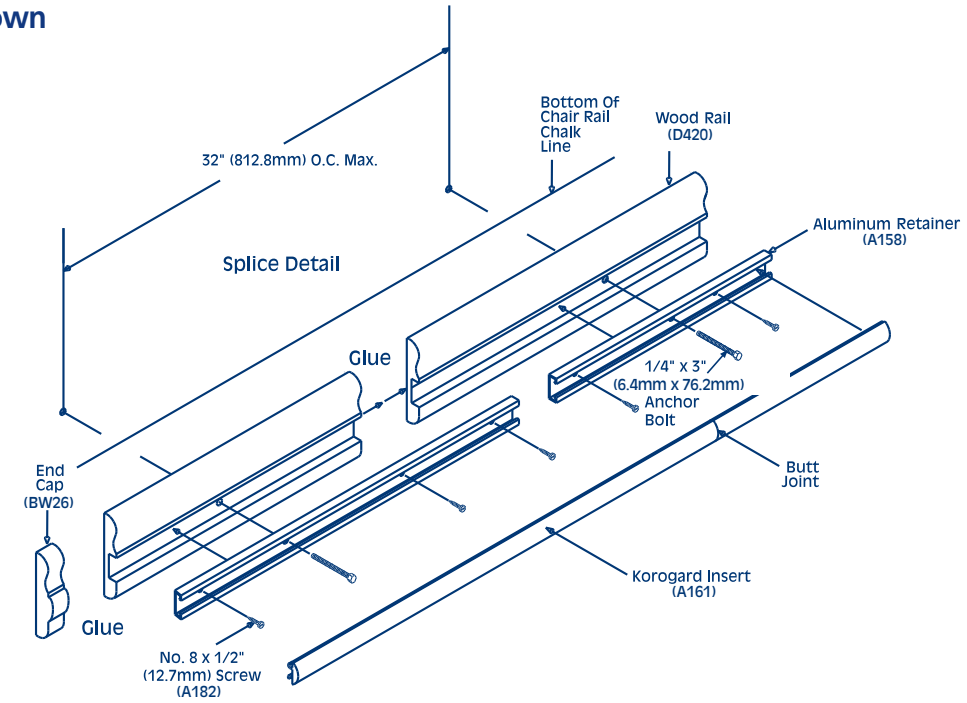

Assembly Drawing

KOROSEAL Wall Protection Systems
Korowood™ BW20, BW40, BW60, BW70, & BW90 Chair Rail

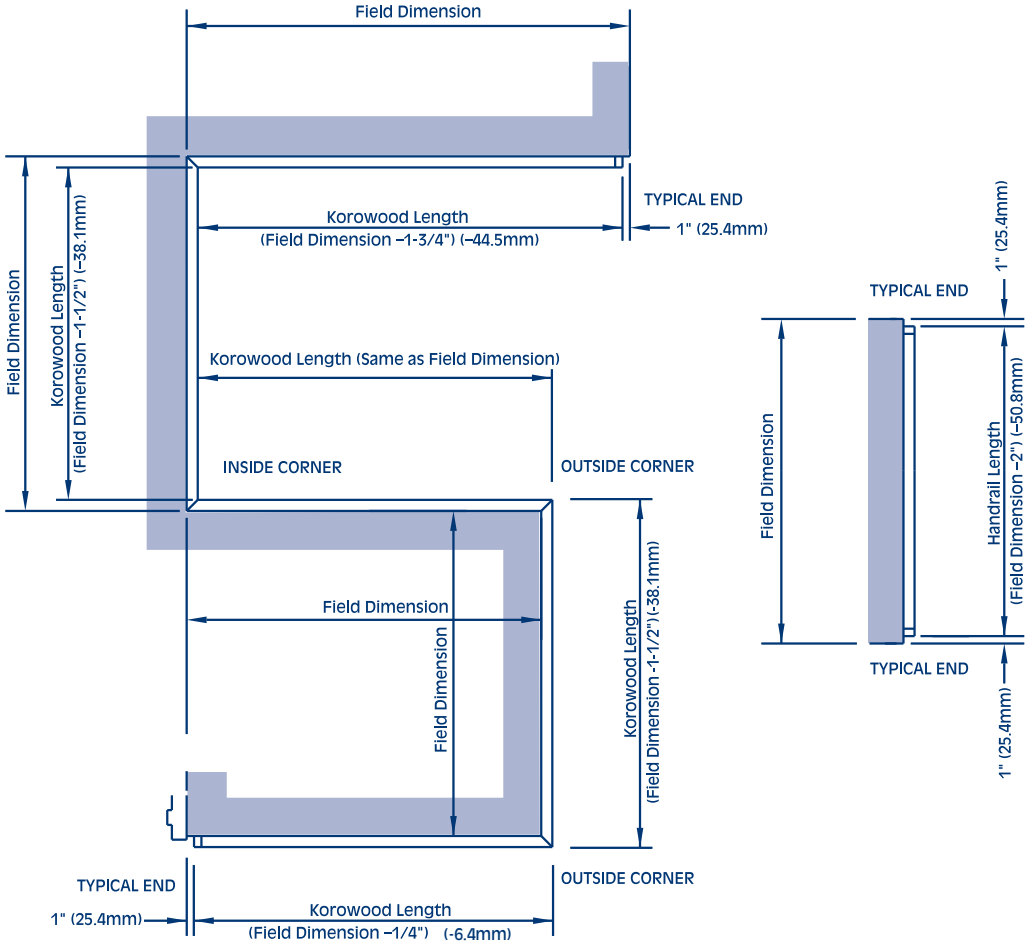

KOROGARD®
WALL PROTECTION SYSTEMS

800-628-0449 • www.korogard.com • Division 10 26 00

Korogard® and Korowood™ are registered trademarks and trademarks of RJF International Corporation.
Minwax® is a registered trademark of The Sherwin-Williams Company.

2588IBW2I31
09-12