KOROSEAL Wall Protection Systems
Korogard® CH20 Chair Rail

1. Locate and install **Korogard®** Chair Rail in accordance with architectural drawings and specifications. When required, **Korogard** shop drawings should be used in conjunction with these documents.
2. Lay out the work to be completed, including all component parts, along the base of the substrate (wall). Check the material for any damage that may have occurred during shipment and/or handling at the job site.
3. Snap a chalk line at the proper location on the substrate to ensure a level installation. Chalk line should be calculated to the center line of the wall fasteners.
4. Determine Chair Rail end locations on substrate. Mark and cut the retainer to appropriate length. Field drill proper size holes along center of retainer 3/4" (19.1mm) in from each end (for the end cap flange and retainer) and at intermediate locations along the retainer not exceeding 16" (406.4mm) O.C.
5. Place the retainer in the proper position on chalk line and attach to wall with proper fasteners (not included).

   Note: Prior to installation of the Korogard cover, make sure that all fasteners are secure and properly seated.
6. It is recommended that the cover be cut slightly longer than the retainer to provide tight fit at caps. Cut **Korogard** cover cleanly and squarely to appropriate length.
7. Hold **Korogard** cover at an angle and place top of cover behind top of retainer. Make sure that the cover is placed in the proper position and snap fit **Korogard** cover onto PVC retainer by placing hands downward and applying pressure with the heel of each hand to force cover onto retainer. Continue along until complete length of cover is securely installed.
8. Apply construction adhesive (not included) to inside rim of end cap and seat over end of rail. Remove all excess adhesive.
9. If you have any questions during installation, please call your local **Korogard** representative.

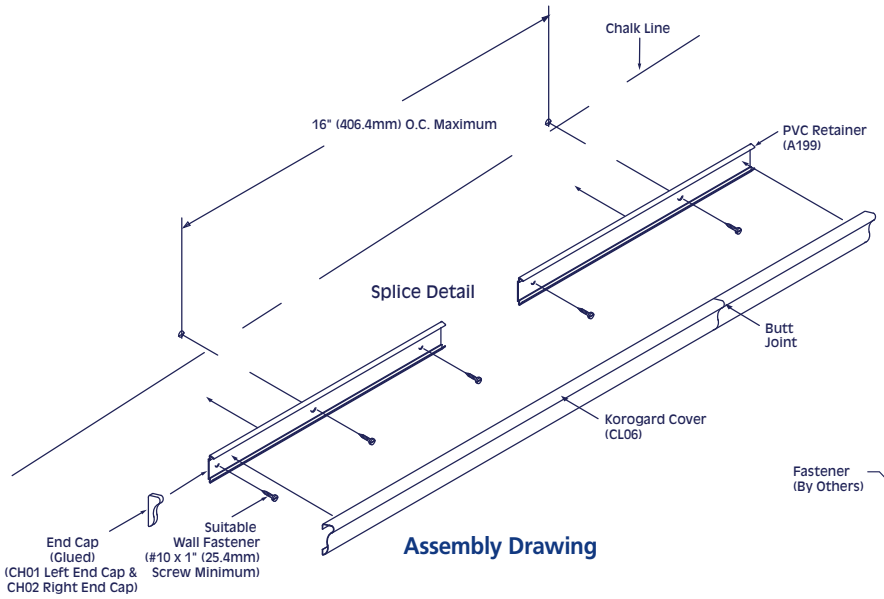

Assembly Drawing

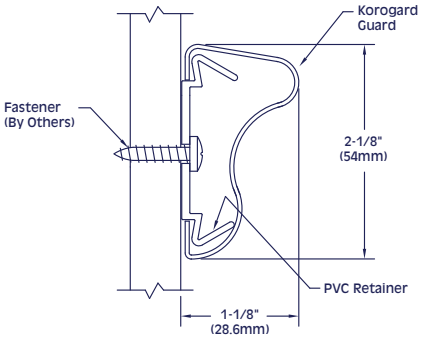

Model CH20

KOROGARD®
WALL PROTECTION SYSTEMS

800-628-0449 • www.korogard.com • Division 10 26 00

Korogard® is a registered trademark of RJF International Corporation.